1. Please use the grease designated by Trident drive Harmonic Reducer installation note (MF-2 or MF-3)

2. The size with * in the figure is the reference size for installation, please follow the installation size requirements;

3. For the details of the size, please use the delivery specification drawing to confirm

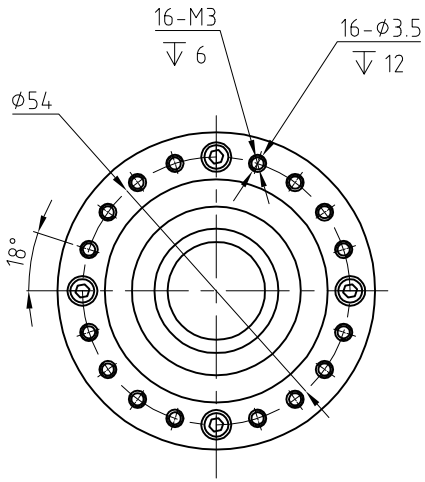

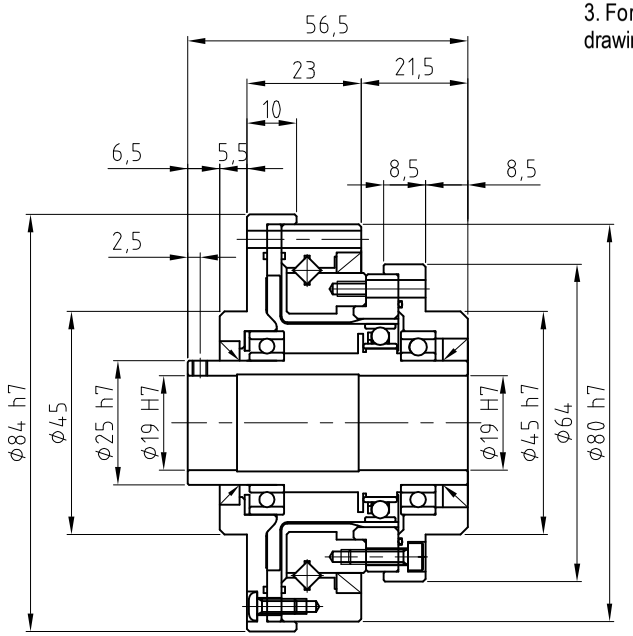

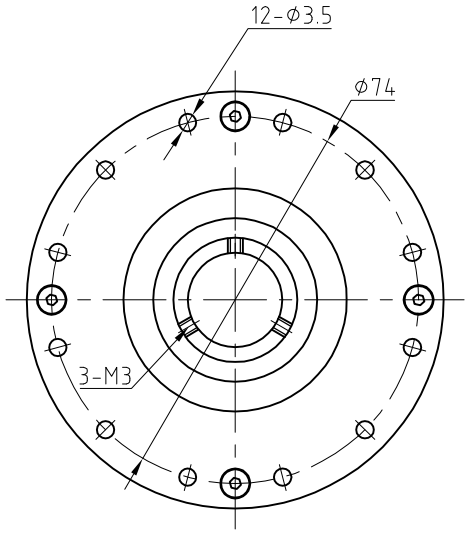

NOT FOR PUBLICATION

THE REPRODUCTION, DISTRIBUTION AND UTILIZATION OF THIS DOCUMENT AS WELL AS THE COMMUNICATION OF ITS CONTENTS TO OTHERS WITHOUT EXPRESS AUTHORIZATION IS PROHIBITED. OFFENDERS WILL BE HELD LIABLE FOR THE PAYMENT OF DAMAGES. ALL RIGHTS RESERVED IN THE EVENT OF THE GRANT OF A PATENT, UTILITY MODEL OR DESIGN

Title

TRIDENT DRIVE HARMONIC REDUCER

Part No

MHT-17-XX-U-III

CAD DRAWN - NOT TO BE MODIFIED BY HAND | ALL DIMENSIONS IN MM